ANNEXURE-III

This drawing is the property of L & T Control & Automation - EAIC and must not be passed on to any person or body not authorised by us to receive it nor be copied or otherwise made use either in full or in part by such person or body without our prior permission In writing.

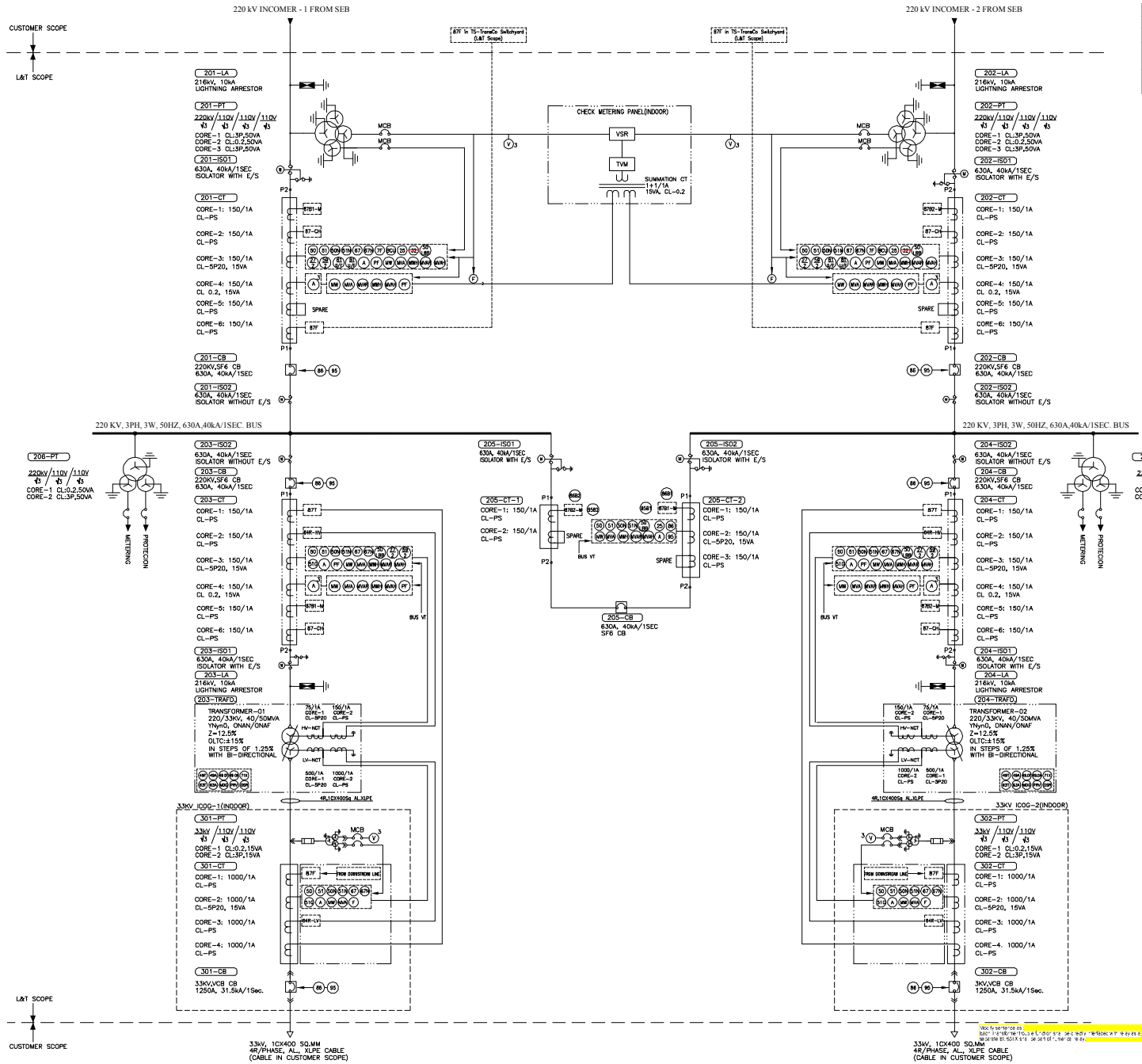

33KV BILL OF MATERIAL

SL.NO	EQUIPMENT NAME	SYMBOL	DESCRIPTION	QUANTITY
1	VCB CB		VCB CIRCUIT BREAKER 33kV, 1250A, 31.5kA/1Sec.	02 Set.
2	VOLTAGE TRANSFORMER		33kV/√3 / 110V/√3 / 110V/√3 CORE-1: CL:0.2,15VA CORE-2: CL:3P,15VA	6 Nos
3	CURRENT TRANSFORMER		1000/1-1-1-1A CORE-1: CL-PS CORE-2: CL-5P20, 15VA CORE-3: CL-PS CORE-4: CL-PS	08 Nos

SYSTEM PARAMETERS

SL.NO	DESCRIPTION OF PARAMETERS	SYSTEM RATING		
01	NORMAL SYSTEM VOLTAGE (kV)	220	33	0.415V
02	HIGHEST SYSTEM VOLTAGE (kV)	245	36	0.485
03	LIGHTING IMPULSE WITHSTAND VOLTAGE LEVEL (1.2/50ms)	1050	170	-
04	ONE MINUTE POWER FREQUENCY WITHSTAND VOLTAGE (kV rms)	460	70	2.5
05	SYSTEM FAULT LEVEL (kA)	40/1Sec	31.5/1Sec.	50/1Sec.
06	VOLTAGE VARIATION	+/- 10%	+/- 6%	+/- 6%
07	FREQUENCY VARIATION	+/- 3%	+/- 3%	+/- 3%
08	SYSTEM NEUTRAL EARTHING	DOUBLY EARTHED FOR 220kV & 33kV SYSTEM		
09	SYSTEM FREQUENCY(HZ)	50		
10	BUS CONFIGURATION	SINGLE BUS WITH TIE BREAKER		
11	NO OF PHASE	3		
12	DC SYSTEM(2WIRE)	220V (+/-10%)		

220KV BILL OF MATERIAL

SL.NO	EQUIPMENT NAME	SYMBOL	DESCRIPTION	QUANTITY
1	LA		216kV, 10kA LA CLASS-B	12 Nos
2	ISOLATOR		220kV, 630A, 40kA/1Sec., HORIZONTAL DOUBLE BREAK ISOLATOR WITH 1 EARTH SWITCH	06 Set.
			220kV, 630A, 40kA/1Sec., HORIZONTAL DOUBLE BREAK ISOLATOR WITHOUT EARTH SWITCH	04 Set.
3	SF6 CB		SF6 CIRCUIT BREAKER 220kV, 630A, 40kA/1Sec.	05 Set.
4	VOLTAGE TRANSFORMER		220kV/√3 / 110V/√3 / 110V/√3 CORE-1 CL:0.2,50VA CORE-2 CL:3P,50VA CORE-3 CL:3P,50VA	6 Nos.
5	VOLTAGE TRANSFORMER		220kV/√3 / 110V/√3 / 110V/√3 CORE-1 CL:0.2,50VA CORE-2 CL:0.2,50VA	6 Nos.
6	CURRENT TRANSFORMER		150/1-1-1-1-1-1-1A CORE-1: CL-PS CORE-2: CL-PS CORE-3: CL-5P20, 15VA CORE-4: CL-0.2, 15VA CORE-5: CL-PS CORE-6: CL-PS	06 Nos.
			150/1-1-1-1-1-1-1A CORE-1: CL-PS CORE-2: CL-PS CORE-3: CL-5P20, 15VA CORE-4: CL-0.2, 15VA CORE-5: CL-PS CORE-6: CL-PS	06 Nos.
			150/1-1-1-1A CORE-1: CL-PS CORE-2: CL-5P20, 15VA CORE-3: CL-PS	03 Nos.
			150/1A CORE-1: CL-PS CORE-2: CL-PS	03 Nos.
7	TRANSFORMER		POWER TRANSFORMER-1&2 220/33kV, 40/50MVA YNynO, ONAN/ONAF Z=12.5% OLTC:±15% IN STEPS OF 1.25% WITH BI-DIRECTIONAL	2 Nos
8	HV-NCT		75/1A, CORE-1: CL-5P20 150/1A, CORE-2: CL-PS	02 Nos.
9	LV-NCT		500/1A, CORE-1: CL-5P20 1000/1A, CORE-2 CL-PS	02 Nos.

NOTES:-

1. THE VA BURDEN, KNEE POINT VOLTAGE, Imag CURRENT FOR THE CTs AND PTs SHALL BE FINALIZED AS PER CT-PT SIZING & SAME SHALL BE SUBMITTED SEPARATELY.
2. RELAY TO BE SUPPLY IN LOOSE AS FOLLOWS FOR L&T SUPPLY:
   a. 87F RELAY(2NO.) – FOR 220KV TSTRANSCO SWYD.
   a. 87F RELAY(2NO.) – FOR 33kV SWITCHBOARD IN CPP.
3. COMMUNICATION MEDIA BETWEEN DIFFERENTIAL PROTECTION RELAYS SHALL BE THROUGH FO CABLE FO CABLES AND ALL ASSOCIATED TERMINATION ACCESSORIES FOR 220KV & 33KV INCLUDING LIU CONSIDERED.(IN L&T SCOPE)
4. ALL RELAYS SHALL BE NUMERICAL AND COMMUNICABLE TYPE (VIA IEC-61850) EXCEPT FOR 86, 95, 80 WHICH SHALL BE CONVENTIONAL AUX. (TRANSIENT INSENSITIVE FAULT PROTECTION WILL BE PROVIDED ACCORDING WITH NUMERICAL RELAYS.)
5. METERS SHALL BE PROVIDED FOR BI-DIRECTIONAL POWER FLOW.

REF. DWG. NO.	REFERENCE DRAWING TITLE

LEGEND

SL.NO	SYMBOL	DESCRIPTION
1		LIGHTNING ARRESTOR
2		TRANSFORMER WITH OLTC
3		CIRCUIT BREAKER
4		CURRENT TRANSFORMER
5		POTENTIAL TRANSFORMER
6		MOTORISED ISOLATOR WITH EARTH SWITCH
7		MOTORISED ON LOAD ISOLATOR
8		DRAW-OUT CIRCUIT BREAKER
9		MCB
10		FUSE
11		NEUTRAL CT
12	A	AMMETER
13	V	VOLTMETER
14	F	FREQUENCY METER
15	MW, MVA	MEGA WATT, MEGA VOLTE METER
16	VSR	VOLTAGE SELECTOR RELAY
17	TVM	TRI VECTOR METER

RELAYING

A.	MAIN RELAY (NUMERICAL & ELECTROMECHANICAL):	
1	2	TIME DELAY RELAY
2	7F	df/dt RELAY
3	25	CHECK SYNCHRONISM RELAY
4	27	UNDER VOLTAGE RELAY
5	50	INSTANTENEOUS O/C RELAY
6	51	IDMT OVER CURRENT RELAY
7	50N	INSTANTENEOUS E/F RELAY
8	51N	IDMT E/F RELAY
9	51G	STAND-BY E/F RELAY
10	50LBB	LOCAL BREAKER BACKUP
11	59	OVER VOLTAGE RELAY
12	64R	RESTRICTED E/F RELAY
13	67	DIRECTIONAL O/C RELAY
14	67N	DIRECTIONAL E/F RELAY
15	80	SUPPLY FAILURE RELAY(AC/DC)
16	81(O/F & U/F)	FREQUENCY RELAY (OVER FREQUENCY/UNDER FREQUENCY)
17	86	MASTER TRIP RELAY
18	86B-M	MASTER TRIP RELAY FOR BUSBAR DIFF. – MAIN ZONE
19	86B-C	MASTER TRIP RELAY FOR BUSBAR DIFF. – CHECK ZONE
20	87F	FEEDER DIFFERENTIAL RELAY
21	21	DISTANCE RELAY
22	87T	TRANSFORMER DIFFERENTIAL RELAY
23	87B-M	BUSBAR DIFFERENTIAL RELAY–MAIN ZONE
24	87-CH	BUSBAR DIFFERENTIAL RELAY–CHECK ZONE
25	195, 295	TRIP CKT. SUPERVISION
26	95B-M	TRIP CKT. SUPERVISION FOR BUSBAR DIFF. – MAIN ZONE
27	95B-C	TRIP CKT. SUPERVISION FOR BUSBAR DIFF. – CHECK ZONE
28	32	DIRECTIONAL REVERSE POWER RELAY WITH BUILT IN TIMER
B.	AUXILIARY RELAY FOR TRANSFORMER FAULTS:	
1	49T	WINDING TEMPERATURE TRIP RELAY
2	49A	WINDING TEMPERATURE ALARM RELAY
3	49.OT	OIL TEMPERATURE TRIP RELAY
4	49.OA	OIL TEMPERATURE ALARM RELAY
5	63T	BUCHHOLTZ TRIP RELAY
6	63A	BUCHHOLTZ ALARM RELAY
7	71X	LEVEL SWITCH (AUXILIARY)
8	MOG	MAGNETIC OIL GAUGE
9	PRV	PRESSURE RELIEF RELAY
10	OSR	OIL SURGE RELAY

SL.	DATE	REVISIONS	PREP	CHKD	APPD	MGR
4	27.02.17	REVISED BASED ON MOM DATED 21.2.17	AK	JS	PCP	
3	03.02.17	REVISED AS PER COMMENTS	AK	JS	PCP	
2	27.01.17	REVISED AS PER COMMENTS DOC.A747	AK	JS	PCP	
1	03.01.17	REVISED AS PER COMMENTS DOC.A747	AK	SV	TS	
0	02.01.17	ISSUED FOR APPROVAL	AK	SV	TS	

रामगुंडम फर्टिलाइजर & केमिकल्स लिमिटेड तेलंगाणा

REVIVAL OF RAMAGUNDAM FERTILIZER COMPLEX
RAMAGUNDAM, TELANGANA

CUSTOMER:- RAMAGUNDAM FERTILIZERS & CHEMICALS LTD. (A JOINT VENTURE BY NFL, EIL & FCIL)

CONSULTANT:- EIL ENGINEERS INDIA LIMITED (A Govt. of India Undertaking)

CONTRACTOR:- L&T CONTROL & AUTOMATION

TITLE:- SINGLE LINE DIAGRAM

SCALE	DWG. NO.	REV.
1:1	833906-E-BE-001	3